Hunteck

Feature

- High Speed Power Switching, Logic Level
- Enhanced Body diode dv/dt capability
- Enhanced Avalanche Ruggedness
- 100% UIS Tested, 100% Rg Tested
- Lead Free, Halogen Free

			:
			:
			:
			:

Application

- Synchronous Rectification in SMPS
- Hard Switching and High Speed Circuit
- DC/DC in Telecoms and Inductrial

TO-263

TO-220

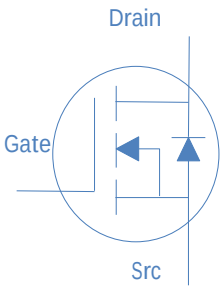

	T		
	T		

:

P

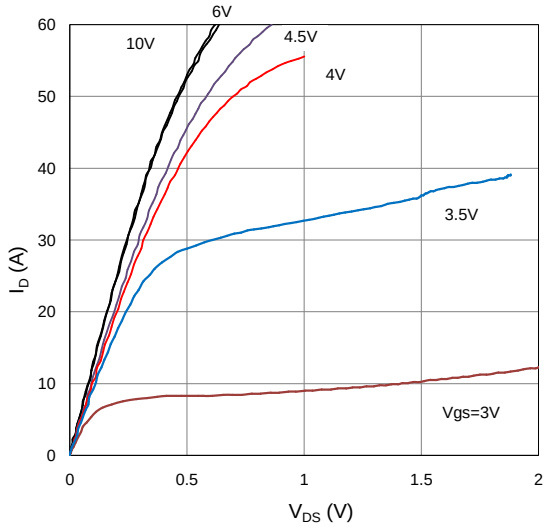
6V
10V
4.5V
4V
3.5V
Vgs=3V
I_D (A)
V_{DS} (V)

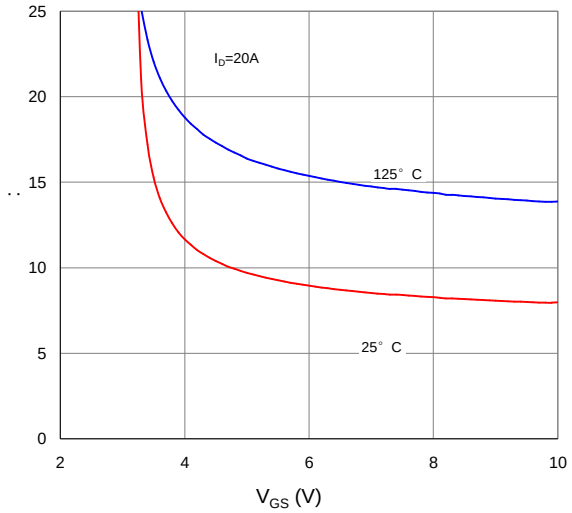
I_D=20A
125° C
25° C
V_{GS} (V)

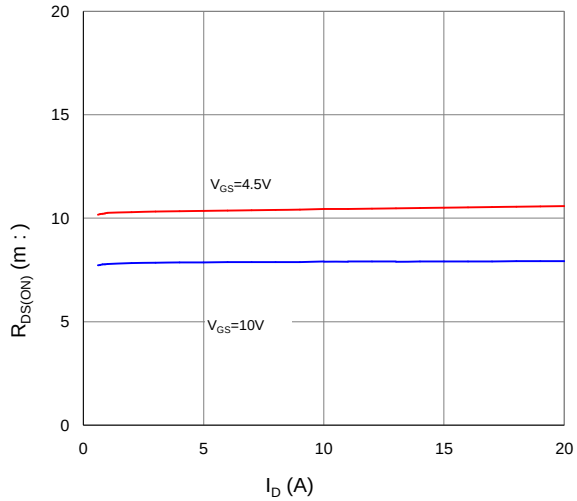
V_{GS}=4.5V
V_{GS}=10V
$R_{DS(ON)}$ (m :)
I_D (A)

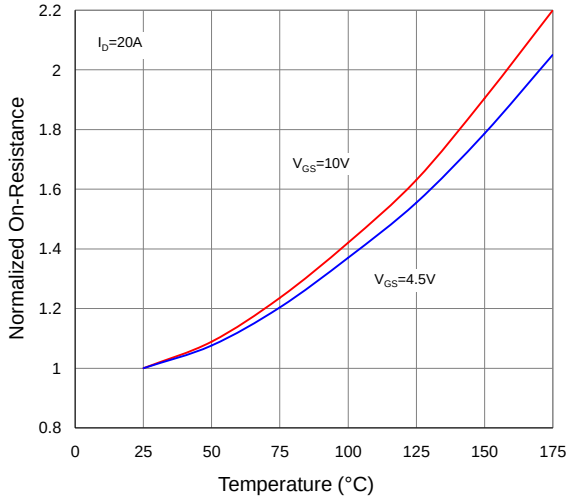
I_D=20A
V_{GS}=10V
V_{GS}=4.5V
Normalized On-Resistance
Temperature (°C)

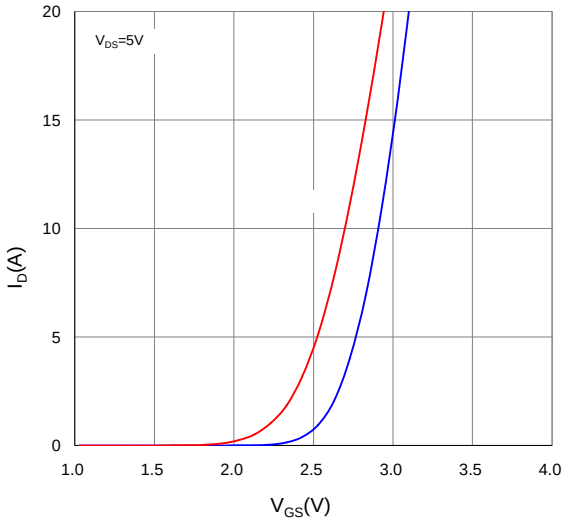
V_{DS}=5V
I_D(A)
V_{GS}(V)

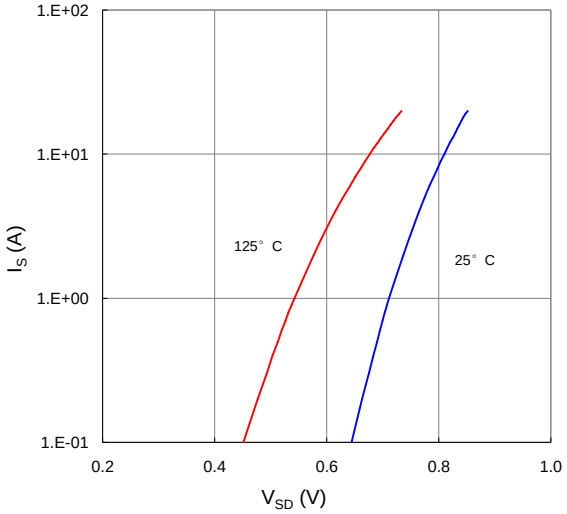
125° C
25° C
I_S (A)
V_{SD} (V)

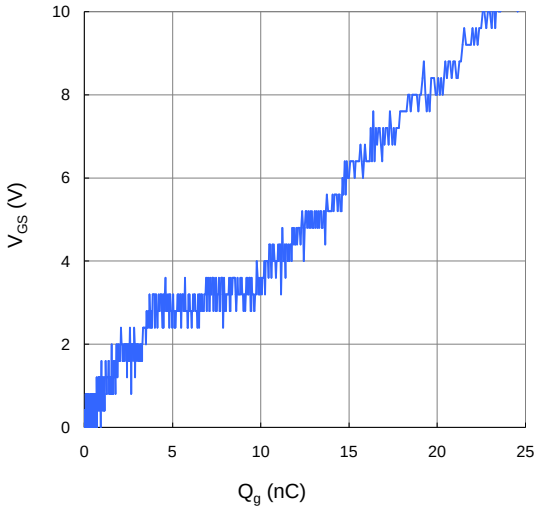
10
8
6
4
2
0
0
5
10
15
20
25
V_{GS} (V)
Q_g (nC)

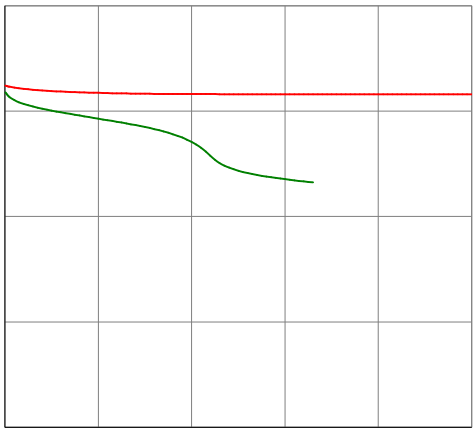

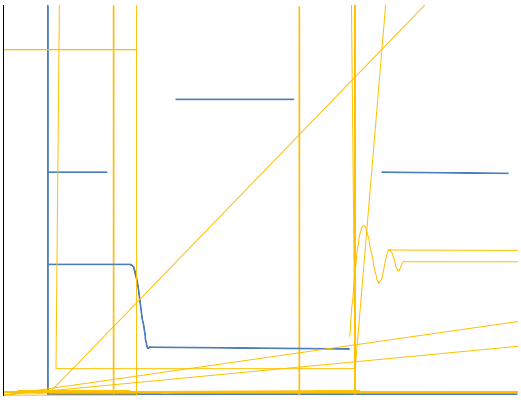

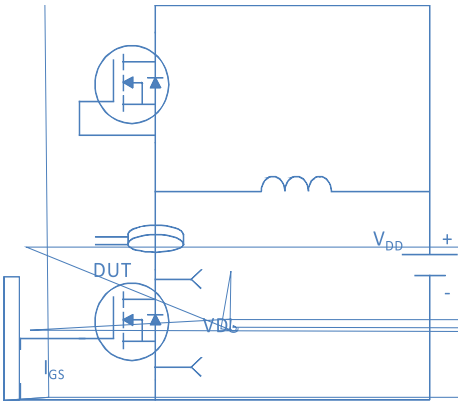
DUT
V_{DD}
+
-
VDS
I_{GS}

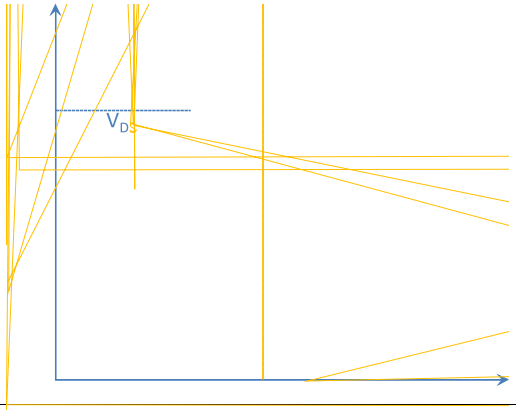
V_{DS}

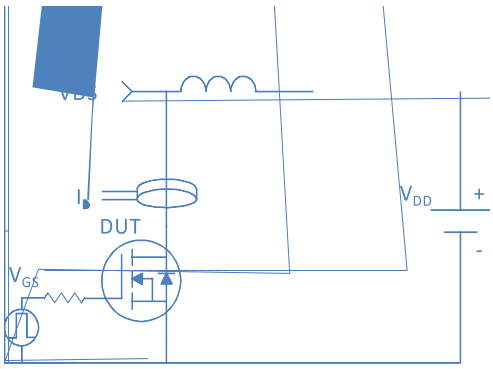
DUT
V_{DD}
+
-
V_{GS}

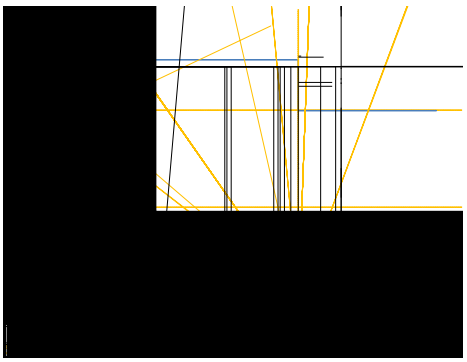

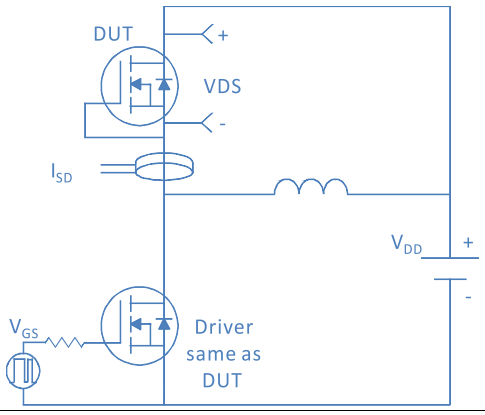
DUT
+
VDS
-
I_{SD}
V_{DD}
+
-
V_{GS}
Driver
same as
DUT

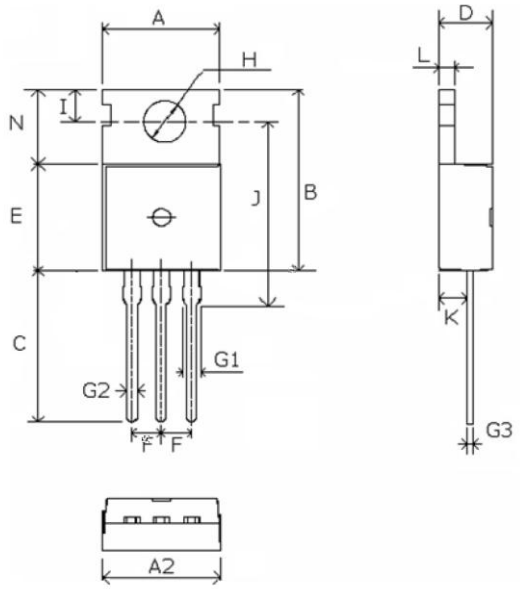
A
H
D
L
N
I
E
J
B
C
G1
G2
K
G3
F
F
A2

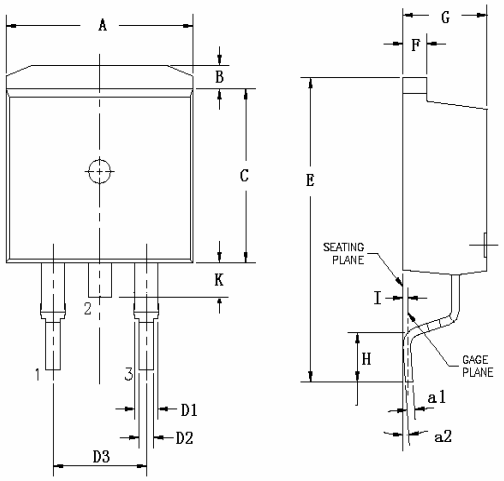
A
B
C
K
2
1
3
D1
D2
D3
G
F
E
SEATING PLANE
I
H
GAGE PLANE
a1
a2